DVR with Artificial Intelligent Controller for Voltage Sag Mitigation

Mohamed Mohamed Khaleel, Khaled Abduesslam, Prof. Muhammad Nizam, and Dr. Inayati, ST., MT., ph.D

***Abstract*----**Dynamic Voltage Restorer (DVR) is used in power distribution system to protect sensitive load in voltage disturbances. Voltage sag is one of the most important power quality problems challenging the utility industry. Voltage sags can be compensated by voltage and power injection into the distribution system. DVR is developed using Mamdani-type fuzzy inference system and Sugeno-type fuzzy inference system. They are two input and one output. Both Mamdani-type fuzzy inference system and Sugeno-type fuzzy inference system are simulated using MATLAB fuzzy logic toolbox. This paper outlines the basic difference between these two fuzzy inference system and their simulated results were compared.

***Keywords*—**Dynamic Voltage Restorer (DVR), Mamdani-type fuzzy inference system (FIS), MATLAB, Sugeno-type fuzzy inference system (FIS), and Voltage Sag

I. Introduction

IN recent years the demand for quality of electronic power has been increasing rapidly. Power quality problems has recieved a great attention nowadays because of their impacts on both utilites and customers[1]. There are many power quality problems such as voltage sag, voltage swell, harmonics, flickers, interruption etc. Among these, voltage sag is considered to have the most severe effect on the equipments[2]. These effects can be very burdening for customers, from minor quality variations to production downtime and equipment damage[3].

Mohamed Mohamed Khaleel is currently working toward the MSc degree in Sebelas Maret University, Central Java,Indonesia. His research interest includes Power System Analysis, Power Electronics ,Power Quality,Control Systems,Simulation, FACTs and Renewable Energy. Email: lykhaleel@gmail.com

Khaled Abduesslam is currently working toward the MSc degree in Sebelas Maret University, Central Java,Indonesia. His research interest includes Power System Analysis, Power Electronics ,Power Quality,Control Systems, and Renewable Energy.

Prof. Muhammad Nizam, Member of University Senate / Head of control unit UNS Ex. Power System. Power Quality. Energy Management System. Email: Nizam_kh@ieee.org

Dr. Inayati, ST., MT., ph.D, Chemical Engineering Department, Faculty of Engineering, Sebelas Maret University, Surakarta, Indonesia. Telp: +62271632112 (office) +62274375213 (home) +6282138248908 (mobil[[) Email: inayati@fi.uns.ac.id

According to the IEEE standard,voltage sag decreases from 0.1 to 0.9 p.u in the rms voltage level at the system frequency and with duration of half cycle to 1 min[4]. Voltage swells are not considered as important as voltage sag because they are less common in distribution systems [3].

DVR is a custom power device connected to the load through a series transformer. To compensate voltage distrubances, series voltage is injected through the transformer by voltage-source converter connected to dc power source. The first DVR was intalled in North Carolina, for the rug manufacturing industry. Another was intalled to provide service to a large dair food processing plant in Australia [16].

There are many different methods using to mitigate voltage sag. Using a DVR method is an effective Custom Power Device which can improve power quality, especially voltage sags [4]. The basic operating principle of DVR is to detect the voltage sag and inject the missing voltage in series transformer [2].

Artificial Intelligence techniques such as neural networks and Fuzzy Logic Controller (FLC) are getting more attention nowadays. d-q-0 technique has been proposed based on Artificial Intelligent techniques. Both Mamdani-type fuzzy inference system and Sugeno-type fuzzy inference system are two samples of methods proposed for the DVR The advantage of these two techiques is that they use human experience. In addition. FLC appears to be the most promising due to its lower computation burden and robustness.

This paper not only introduces DVR and its operating principle, but also presents the proposed controller which is a combination of FLC and d-q-0 technique. DVR control approaches used in this paper are Mamdani-type fuzzy inference system and Sugeno-type fuzzy inference system methods. These the two approaches are going to be compared to determine which approach is more robust. Then, the simulation results are going to be analyzed using MATLAB-SIMULINK to provide a comparison between the proposed and the conventional d-q-0 technique in terms of performance in voltage sag compensation.

II. Modelling of DVR

Among power quality problems (voltage sag and swell, harmonics), voltage sag causes the most severe distrubances. In order to overcome these disturbances, the concept of custom power devices are introduced. One of those device is

DVR, which is regarded as the most efficient and effective modern custom power device used in power distribution networks.

The function of the DVR is to inject the missing voltage in order to regulate the load voltage from any disturbance due to immediate distort of source voltage [5]. The DVR was first intalled in 1996. DVR is normally installed in distribution between the supply and critical load feeder. Other DVR functions are to rapidly boost up the loadside voltage in the event of a disturbance and avoid any power disruption to that load there arevarious circuit topologies and control schemes [6]. DVR can also add other features like line voltage harmonics compensation, reduction of transients in voltage and fault current limitations[5].

The general configuration of DVR consists of voltage injection transformer, an output filter, an energy storage device, voltage Source Inverter (VSI), and Control system shown in Figure 1.

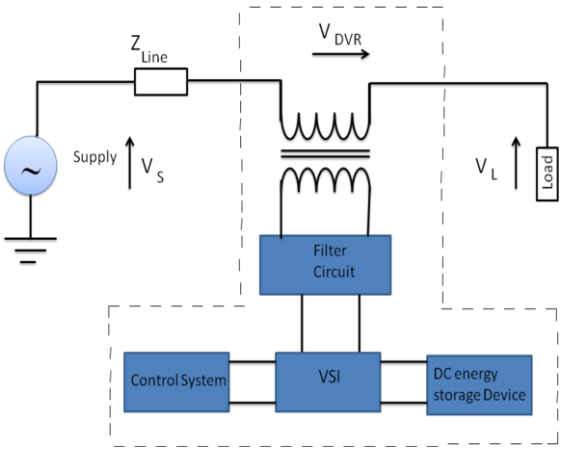

Fig. 1 Structure of DVR [6]

DVR is a series connected device designed to maintain aconstant RMS voltage across a senstive load. The DVR consists of :

A. Voltage Source Inverter (VSI)

Voltage Sourse Inverter converts the DC voltage from the energy storage unit to a controllable three-phase AC voltage. The inverter switches are normally fired using a sinusiodal pulse Width Modulation scheme[7].

B. Passive Switch

Filters are used to convert the inverted PWM pulse waveform. This is acheived by removing the unnecessary higher harmonic compounds generated during the DC to AC conversion in the Voltage Source Inverter. Higher harmonic componeents distort the compensated output voltage [8].

C. Energy Storage Unit

It is important for energy to be stored in the DC form such as flywheels, batteries, superconducting magnetic energy storage (SMES) and super capacitors.They can be used as energy storage devices and supply the real power requirement of the system when DVR used for compensation[9].

D. Voltage Injection Transform

In a three-phase system, three single-phase transformer units and one-three phase transformer unit can be used inject the voltage in the proposed system [10].

E. Control System

The aim of the control system is to maintain constant voltage magaitude at the point where a senstive load is connected under system disturbances [11].

III. OPERATION OF DVR

DVR dynamically injecs controlled voltage in series with bus voltage through the booster tranformer. The amplitudes of the injected phase voltages are controlled to eliminate the terimental effects of the bus fault to the load voltage. The system impendance Z_{th} depends on the fault level of the load bus when the system voltage (V_{th}) drops. DVR injects a series voltage V_{DVR} through the injection of tranformer so that the desired load voltage magnitude V_L can be maintained. The series injected voltage on DVR can be written as [14] :

$$V_{DVR} = V_L + Z_{th} I_{th} - V_{th} \quad (1)$$

$$I_L = (P_L + J\, Q_L / V_L) \quad (2)$$

V_L =Desired load voltage magnitude
Z_{th} = load current
I_L = load current
Vth= system voltage during fault

IV. PARK'S TRANSFORMATION

DVR control employs a-b-c to d-q-0 transformation. During normal condtion and symmetrical condition, the voltage will be constant and d-voltage is unity in p.u and q-voltage is zero in p.u. but during the abnormal conditions, the voltage change. After comparing d-voltage and q-voltage with the desired voltage error, d and q are generated. This error component is converted into a-b-c compent using d-q-0 to a-b-c transformation. Phase locked loop (PLL) is used to generate unit sinusoidal wave in phase with main voltage. These a-b-c components are given to generate three-phase pulses using Width Modulation (PWM) technique[13].

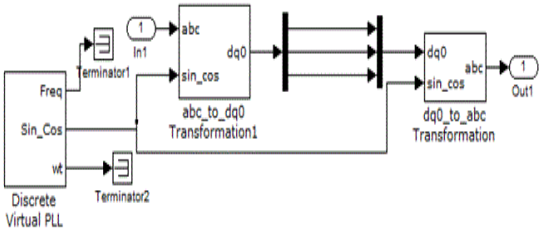

Fig. 2 Scheme Control d-q-0

Figure 2 illustrates the basic control scheme and parameters measured for control purposes. When the supply voltage is at its normal level, DVR is controlled to reduce the losses in the DVR to a minimum voltage. When voltage sags/swells are detected, DVR will react fast and inject an AC voltage into the grid.

The d-q-0 transformation, Park's transformation is used to control of DVR. The d-q-0 method gives the sag depth and phase shift information when the voltage sag starts and when the voltage ends. The quantities are expressed as the instantaneous space vectors. First, convert the voltage from a-b-c reference frame to d-q-0 reference.

$$\begin{bmatrix} V_d \\ V_q \\ V_o \end{bmatrix} = \begin{bmatrix} \cos(\theta) & \cos(\theta - \frac{2\pi}{3}) & 1 \\ -\sin(\theta) & -\sin(\theta - \frac{2\pi}{3}) & 1 \\ \frac{1}{2} & \frac{1}{2} & \frac{1}{2} \end{bmatrix} \begin{bmatrix} V_a \\ V_b \\ V_c \end{bmatrix} \quad (1)$$

Equation 1 defines the transformation from three-phase system a, b, c to d-q-0 stationary frame. In this transformation, phase A is aligned to the d axis that is in quadrature with the q-axis .The theta (θ) is defined by the angle between phases A to the d-axis. The error signal is used as a modulation signal generating a commutation pattern for the power switches (IGBT's) constituting the voltage source converter. [15].

V. FUZZY LOGIC CONTROLLER (FLC)

Fuzzy logic controller (FLC) was first proposed in 1965 as a way to imprecise data by Lofti Zadeh, professor at University of California. After being mostly viewed as a controversial technology for two decades, FLC has finally been accepted as an emerging technology since the late 1980s. This is largely due to a wide array of successful applications such as consumer products, industrial process control, and automotive applications.

FLC is close in spirit to human thinking and natural language than conventional logical systems FLC is a methodology representing and implementing human's knowledge about how to control a system [17]. In general, FLC provides an inference structure enabling appropriate human reasoning capabilities. Figure 3 shows the basic configuration of FLC.

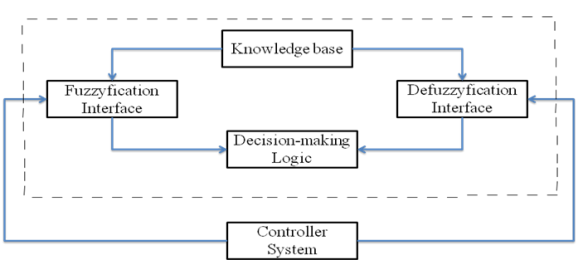

Fig. 3 Basic Configuration of FLC

Unlike Boolean logic, FLC allows states (membership Values) between 0 or 1 [19]. The general structure of FLC is represented in Figure 4 below. FLC comprises four principal components:

- a fuzzyfication interface which converts input data into suitable linguistic values;
- a knowledge base which consists of data base with the necessary linguistic definitions and control rule set;
- a decision-making logic which stimulates human decision process inferring the fuzzy control action from knowledge of the controlrules and linguistic variable defenitions;
- a defuzzyfication interface which yields a non-fuzzy control action

In this paper, FLC block are used for error singnal-d and error signal-q. The error is calculated from the difference between supply voltage data and reference voltage data. The error rate is the the change of error. The error can be formulated as shown in equation below:

$$\text{Error} = V_{ref} - SV \quad (3)$$

$$\text{Error rate} = \text{error}(n) - \text{error}(n-1) \quad (4)$$

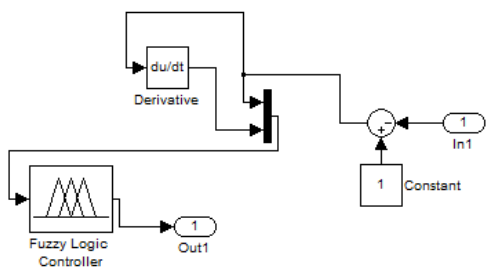

Fig. 4 Fuzzy Logic Controller (FLC) Scheme

The aim of the control system is to maintain voltage magnitude at the point where a sensitive load is connected under system disturbances. The harmonics is generated in the load terminals using six pulse converters with fixed firing angle connected to the main drive non linear load which is parallel to the sensitive load. Voltage sag is created at load terminals via a three-phase fault. The above voltage problems are sensed separately and passed through the sequence analyzer. The control system of the general configuration typically consists of a voltage correction method which determines the reference voltage injected by DVR. In this paper, VSI consists of PWM with FLC.

Input consists of fuzzy error signal derived from the reference voltage. It controls the proposed DVR based on a fuzzy logic. The PWM signal generator controls the DVR inverter to generate the required injected voltage. The function of FLC is very useful since its exact mathematical model is not required. FLC system can be divided into four main functional blocks; Knowledge base, Fuzzification,

Inference mechanism and Defuzzification Rule base. In this study, a fuzzy logic based feedback controller is employed to controll the voltage injection of the proposed (DVR). The implication step of FLC is used to introduce the evalution of indiviual rules.

In further sections of this paper, analysis of various methods of DVR control, each resulting from innovative improvements on the existing methods will be carried out. New DVR control approaches introduced in this paper are Sugeno-type fuzzy inference system and Mamdani-type fuzzy interference system.

A. Sugeno-type FIS

Sugeno-type fuzzy inference system has better processing time since the weighted average replaced the time consuming defuzzification process than Mamdani-type fuzzy inference system. Due to the interpretable and intuitive nature of the rule base, Mamdani-type FIS is widely used in particular for decision support application. Other differences are that Mamdani-type FIS has output membership functions whereas Sugeno-type FIS has no output membership functions and Mamdani-type FIS is less flexible in system design compared to Sugeno-type FIS as latter can be integrated with ANFIS tool to optimize the outputs [18].

The knowledge base is composed of data base and rule base. Data base consists of input and output membership functions and provides information for appropriate fuzzification and defuzzification operations. The rule-base consists of a set of linguistic rules relating the fuzzified input variables to the desired control actions. Fuzzification converts a crisp input signal, the error, and error change (delta error) into fuzzified signals identified by level of membership in the fuzzy sets. The inference mechanism uses the collection of linguistic rules to convert the input conditions to fuzzified output. Finally, the defuzzification converts the fuzzy outputs to crisp control signals, which in the system acts as the changes in the control input. Input-output fuzzy consists of two inputs that error and delta_error and one output.

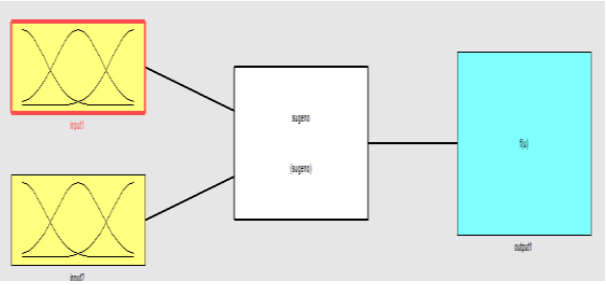

Fig. 5 Construction of a FLS file in Matlab

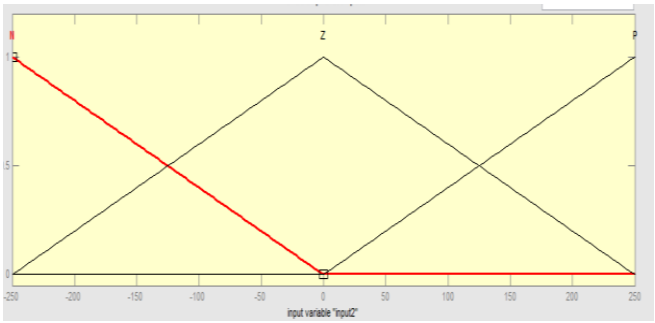

Fig. 6 Membership functions of input error (E).

Fuzzy Interference System constructing processes are conducted as explained below:

1) Choose a specific type of FIS (Mamdani or sugeno)
2) Select relevant input-output variables
3) Determine the number of linguistic terms associated with each input-output variables (determine the membership function for each lingistic term)
4) Design a collections of fuzzy if-then rules.
5) Choose the defuzzification method to exract a crisp value that best represents fuzzy set.
6) Run through test suite to validate system and adjust details as required.

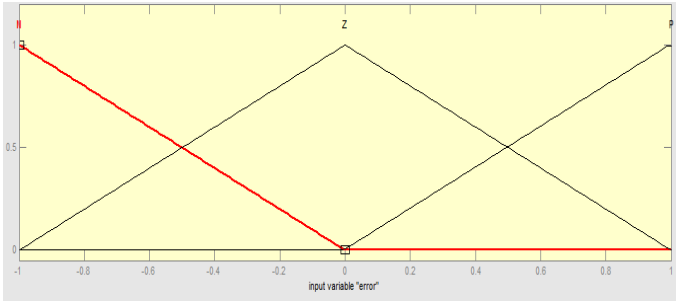

Fig. 7 Membership functions of input delta_error.

The applied output of the fuzzy system consists of constant variables such as NB, NS, Z, PS, PB where NB=-250, NS=-200 Z=0, PS=200, PB=250. Those variables are then converted into the fuzzy rule base as shown in the table 1.

TABLE I
FUZZY RULES

Error / delta_error	N	Z	P
N	**NB**	**NS**	**Z**
Z	**NS**	**Z**	**PS**
P	**Z**	**PS**	**PB**

B. Mamdani-type FIS

Mamdani-type fuzzy inference system method is widely accepted to capture expert knowledge. It allows us to describe the expertise in more intuitive and more human-like manner. However, this method entails a substantial computational burden. On the other hand, Sugeno-type fuzzy inference system method is computationally efficient and

works well with optimization and adaptive techniques, making it very attractive in control problems, particularly for dynamic non linear systems. These adaptive techniques can be used to customize the membership functions so that fuzzy system best models the data. The most fundamental difference between Mamdani-type and Sugeno-type is the way the crisp output is generated from the fuzzy inputs. While Mamdani-type FIS uses the technique of defuzzification of a fuzzy output, Sugeno-type FIS uses weighted average to compute the crisp output. The expressive power and interpretability of Mamdani-type output is lost in the Sugeno-type since the consequents of the rules are not fuzzy [18].

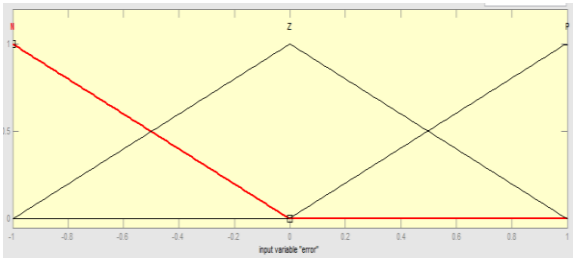

Fig. 8 Membership functions of input error

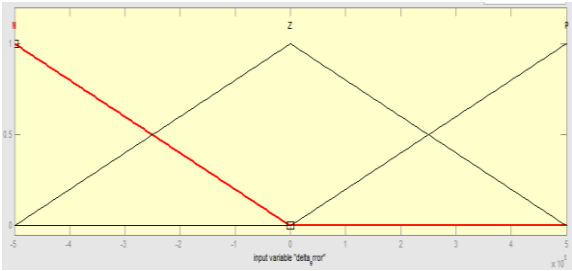

Fig. 9 Membership functions of input delta-error

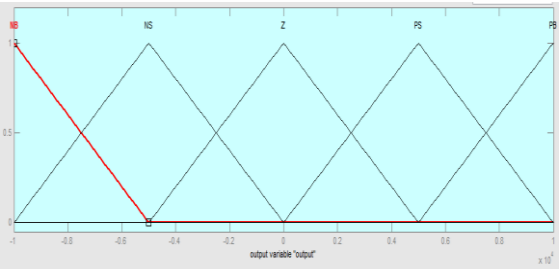

Fig. 10 Membership functions of output fuzzy set.

Output of the Mamdani-type fuzzy inference system is linear function [-10000 10000] consisting of a fuzzy set NB, NS, Z, PS, and PB where, NB = negative big, NS = negative small, Z = zero, PS = positive small, and PB = positive large.

TABLE II
FUZZY RULES

Error / delta_error	N	Z	P
N	**NB**	**NS**	**Z**
Z	**NS**	**Z**	**PS**
P	**Z**	**PS**	**PB**

VI. DVR TEST SYSTEM

The performance of the designed DVR, as shown in Figure 13 and 14 is evaluated using Matlab/Simulink. Tablet 1 shows the values volumes of parameters. DVR Test System comprises 13 kV,50 Hz generator, feeding transmissions lines through a 3-winding transformer connected in Y/Delta/Delta

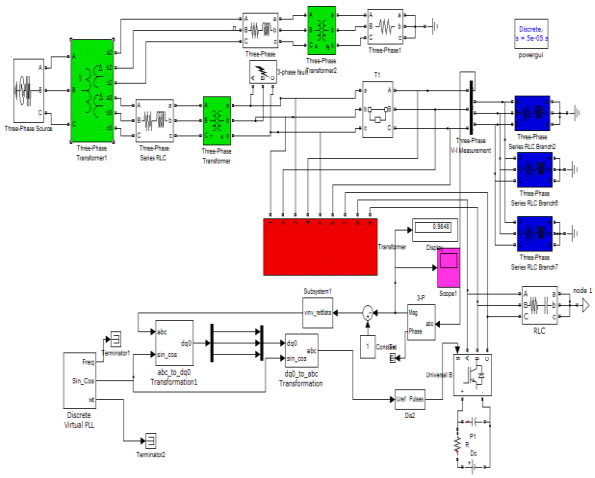

Fig. 11 Matlab model of the DVR based on d-q-0 technique

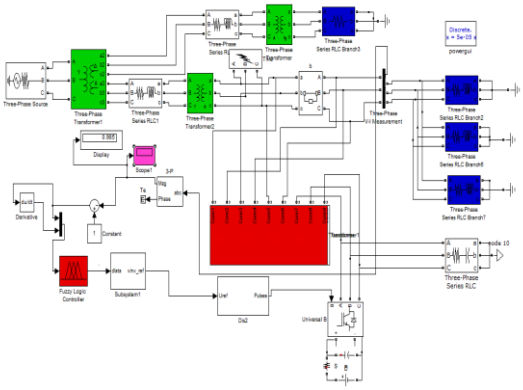

Fig. 12 Matlab model of the DVR based on FLC(Sugeno/Mamdani)

TABLE III
SYSTEM PARAMETERS

System Quantities	*Ratings*
Voltage source	13KV
DC Voltage source	5kV
Line Frequency	50 Hz
Series Transformer Turns Ratio	1:1
IGBT generator	3-arm bridge (6 pulses), 1000 Hz
Line Impedence	Ls = 0.005 H, Rs = 0.001 Ω
Foult Resistances	1.11 ohm
Load Resistance	180 Ω
Load Inductance	0.1926 H

VII. RESULTS DISCUSSION

The result consists of the simulation of distribution network without installation of DVR and simulation on distribution network with installation of DVR systems. DVR is simulated using MATLAB SIMULINK. The voltage sags occur at the time duration of 0.4 sec.

1) Control Surfaces using FLS

The plot is obtained after the simulation of Mamdani-type fuzzy inference system (FIS) and Sugeno-type fuzzy inference system (FIS) using MATLAB Fuzzy logic toolbox (as shown in Figures 13 and 14).

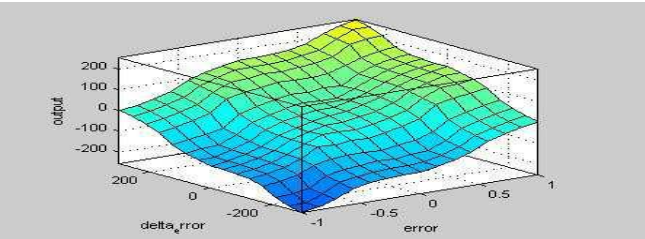

Fig. 13 Control Surfaces of Mandani-type fuzzy inference system.

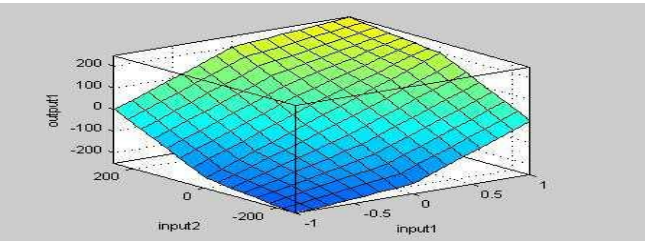

Fig. 14 Control surfaces of Sugeno-type fuzzy control

2) The Result oF DVR

DVR is simulated using MATLAB SIMULINK is used when stimulating the DVR. From this simulation, it can be concluded that the voltage sags occur for 0.4 second as shown in Figure 15 below.

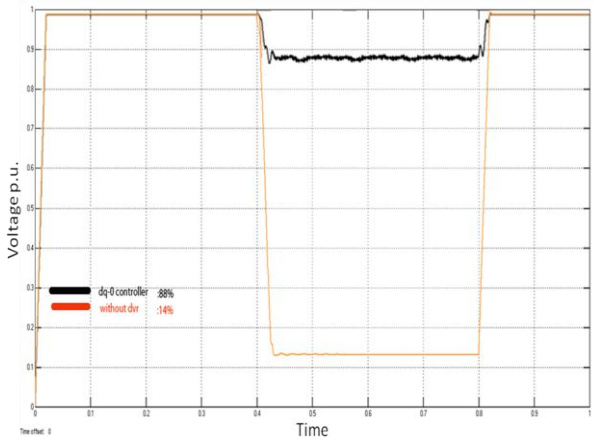

Fig. 15 Compensation of Sag by one-phase d-q-0 with DVR and without DVR

The orange line indicates the occurrence of voltage sag at period of time from 0.4 p.u up to 0.8 p.u. The value of the voltage drops up to 0.14 p.u. because DVR is not installed in the grid. Meanwhile, the black line indicates the DVR installation used in the grid, injecting voltage up to 88% at single phase fault.

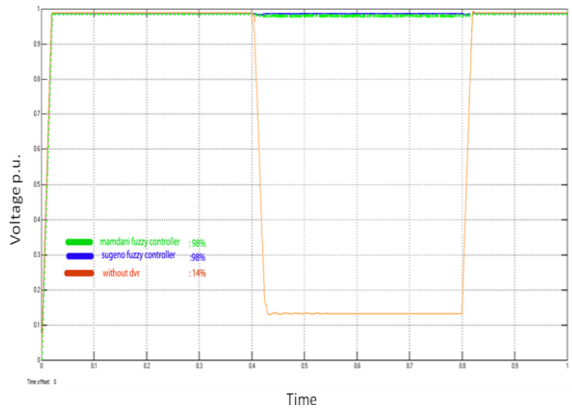

Fig. 16. Compensation of Sag by one-phase fuzzy logic Controller (Sugeno/Mamdani) with DVR and without DVR.

As seen in Figure 16, the green line shows the using Sugeno-type fuzzy inference system method when the voltage sag happens at the period of time from 0.4 up to 0.8. DVR based Sugeno-type is proven to be able to support the network by 98%. The blue line illustrates the using Mamdani-type fuzzy inference system method Mamdani-type fuzzy inference system which gives the same result as Sugeno-type fuzzy inference system .Meanwhile, the orange lines indicates when single-phase fault happens without DVR installation.

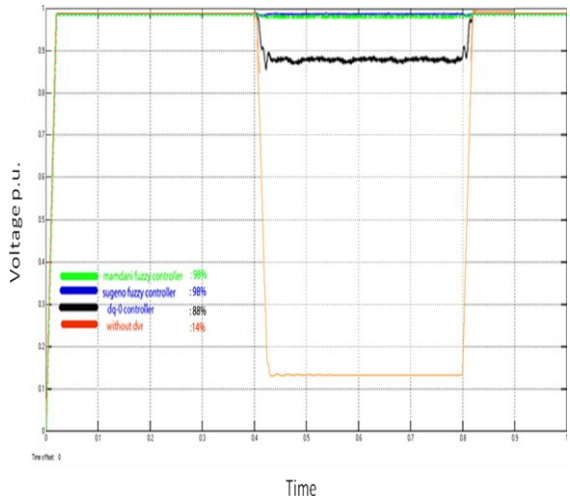

Fig. 17 Compensation of Sag by one-d-q-0, fuzzy logic controller (Sugeno/Mamdani) with DVR and without DVR

As described in Figure 17, the green line illustrates that the green color indicates voltage sag occurrence at the period of time from 0.4 up to 0.8. when DVR Sugeno-type fuzzy inference system is installed. DVR based Sugeno Fuzzy is proven to be able supporting 98% network in the grid. The blue line shows that Mamdani-type fuzzy inference system installation give the same result as Sugeno-type fuzzy inference system when the voltage happens. Meanwhile, the orange line illustrates when single-phase fault happens in the grid without DVR installation. The black line describesthe injected voltage using DVR based on

d-q-0 technique where park's tranformation is able to support 88% network in the grid.

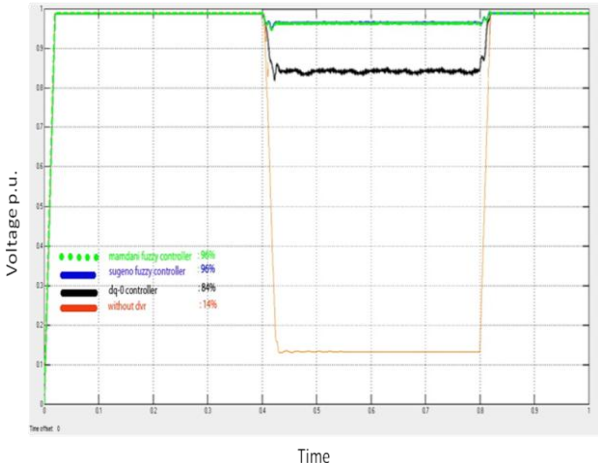

Fig. 18 Compensation of Sag by two-phase d-q-0, fuzzy logic controller (Sugeno) with DVR and without DVR

Figure 18 illustrates that both of Sugeno-type and Mamdani-type fuzzy inference system inject the same value at 96% in the grid when voltage sag happens at the period of time from 0.4 up to 0.8. In this scheme, DVR based d-q-0 technique is able to support 84% network in the grid two-phase fault.

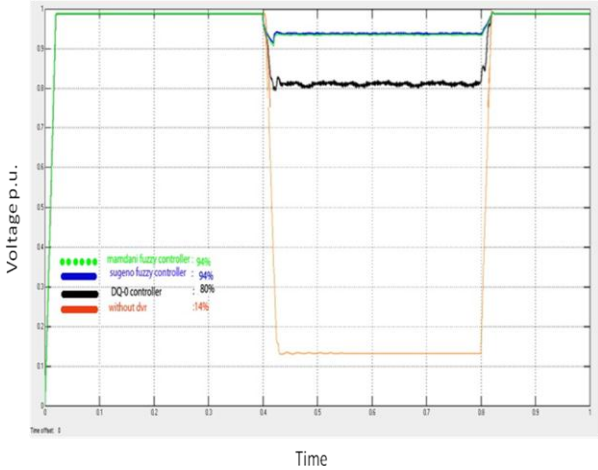

Fig. 19 Compensation of Sag by three-phase d-q-0, Sugeno fuzzy controller with DVR and without DVR.

Figure 19 illustrates that both of Sugeno-type and Mamdani-type fuzzy inference system injects the same value at 94% in the grid when voltage sag happens at the period of time from 0.4 up to 0.8. In this sceme, DVR based d-q-0 technique is able to support 80% network in the grid at three-phase fault.

VIII. CONCLUSION

This paper concludes that DVR is an effective device to compensate the voltage sag in power distribution systems. In term of DVR applications, although Mamdani-type and Sugeno-type share the same functions and rules, there are some distinctions between them. The output membership functions in Sugeno-type can only be either constant or linear. The crisp output is generated in different ways for both the types. In some ways, Sugeno-type is more superior than Mamani-type as it can be integrated with neural networks and genetic algorithm or other optimization techniques.

IX. REFERENCES

[1] L.Dinesh,S.Srinivasa Rao,N.Siva Mallikarjuna Rao "Simulation of Unified Power Quality Conditioner for Power Quality Improvement Using Fuzzy logic and Neuraal Networks". ISBN 2222-2871. Vol 3,2012.

[2] N.J.DHIMMAR, P.DSOLANKI, M.P. MISHRA,"VOLTAGE SAG MITIGATION BY DYNAMIC VOLTAGE RESTORER," JOURNAL OF INFORMATION, KNOWLEDGE AND RESEACH INELECTRICALEN EGINEERING.ISSN: 0975-6736 NOV TO OCT 2013 VOLUME-02, ISSUE -02.

[3] Brahim Ferdi,Chellali Benachaiba "Adaptive Neuro-fuzzy inference System based DVR Control,"journal of scienctific Research Vol.2 (2010).

[4] S.K. Mishra, M.Mangaraj,A.K Nayak,D.K. Mohanta"Dynamic Voltage Restorer Incorporating d-q-0Transformation Enhancing Power Quality," International Journal Of Computer Applications (0975-8887), 2012.

[5] S.Jain,S.S.THAKUR,S.P.PHULAMBRIIKAR,"FUZZY INFERENCE SYSTEM BASED DVR TO MITIGATE POWER QUALITY AND REDUCE THE HARMONICS DISTORTION OF SENSITIVE LOAD,"International Journal of Advanced Research in Electrical, Electronics and Instrumentation Engineering Vol. 1, Issue 5, November 2012.

[6] Mohammad Sarvi, Haniyeh Marefatjou "Compensation of Voltage Single-phase and Swell Using Dynamic Voltage Restorer and Diffence Per-Unit Value Method," International Journal of Electrical and Computer Engineering (IJECE). Vol.3 February 2013, pp 83-92. ISSN 2088-8708.

[7] DR. K Rama Sudha et al. "MODELING AND SIMULATION OF DYNAMIC VOLTAGE RESTORER (DVR) USING NEUROFUZZY INFERENCE SYSTEM, "International journal of engineering Science and Technology (IJEST). Vol.4 NO.03 March 2012 ISSN : 0975-5462.

[8] S.K. Gupta, H.P. Tiwari,Ramesh Pachar, "Study of Major issues and Their Impact on DVR Sytem Performance," International journal of Computer and Electrical Engineering Vol,2. No.1, February,2010/ 1793-8163.

[9] Rosli Omar and N.A Rahim, "Three phase inverter control using DSP controller for dynamic voltage restorer (DVR) application," International Journal of the Physical sciences Vol.6(5),pp.1096-1111,4 March,2011.ISSN 1992-1950.

[10] S.Sadaippan et al." Modeling and Simulation of Series Compensator to Mitigate Power Problems,"International Journal of engineering Science and Technology.Vol.2 (12),2010,7385-7394. ISSN: 0975-5462.

[11] Haniyeh Marefatjou,Mohaemmed Sarvi, "Compensation of Single-phase and three-phase Voltage sag and Swell Using Dynamic Voltage Restorer,"International Jounal of Applied Power Engineering (IJAPE).Vol.1. No.3, December 2012,pp.129-144,ISSN: 2252-8792

[12] Rosi Omar, N.A.Rahim and Marizan Sulaiman, "Compensation of Different Types of Sags in low Voltage Distribution System Using dynamic Voltave Restorer," Australian Journal of basicand Applied Science, 4(8):3959-3969,2010 ISSN:1991_8178

[13] Sach V.Rajani,R.C. Jha, Prem Prakas, "DEEPER AND EXTENDED VOLTAGE SAG MITIGATION BY DYNAMIC VOLTAGE RESTORERINTERFACED WITH ULTRACAPACITOR,"International Journal of Advanced Engineering Technology E-ISSN 0976-3945 Vol,III/ IsueI January-March,2012/230-233.

[14] Alok Jain,SumanBhullar,"Effectiveness of DVR to Compensate the load Voltage Harmonics in Distribution Network under Various operating conditions (Using FOC induction motor as load)," International journal of Advances Research(2013),Volume 1,Issue 7,349-357 ISSN NO 2320-5407.

[15] Anita Pakharia, Manoj Gupta. "DVR Based Compensation of Voltage Sag due to Variations of Load: A Study on Analysis of Active Power ," IOSR Journal of Electrical and Electronics Engineering (IOSRJEEE) ISSN : 2278-1676 Volume 1, Issue 1 (May-June 2012), PP 38-48

[16] H.Ezoji,A.Sheikholeslami,*M.Rezanhad,H.Livani*," A new control method for Dynamic Voltage Restorer with asymmerical inverter legs based on fuzzy logic controller,"Simulation Modeling Practive and the Theoty 18(2010) 806-819

[17] Vandna Kamboj, Amrit Kaur,"Comparison of Constant SUGENO-Type and MAMDANI-Type Fuzzy Inference System for Load Sensor, "International Journal of Soft Computing and Engineering (IJSCE) ISSN: 2231-2307, Volume-3, Issue-2, May 2013

[17] Arshdeep Kaur, Amrit Kaur,"Comparison of Mamdani-Type and Sugeno-Type Fuzzy Inference Systems for Air Conditioning System,"International Journal of Soft Computing and Engineering (IJSCE) ISSN: 2231-2307, Volume-2, Issue-2, May 2012

[18] Ezhilarasan S.,Balasubramanian G., DVR for Voltage Sag Mitigation Using Pi With Fuzzy Logic Controller, International Journal of Engineering Research and Application, Vol. 3. 2013

Mohamed Mohamed Khaleel was born in 09-07-1988, Misrata, Libya. He is currently working toward the MSc degree in Sebelas Maret University, Central Java,Indonesia. His research interest includes Power System Analysis, Power Electronics ,Power Quality, Control Systems, Renewable Energy, and Artificial Intelligence Systems.
Email: lykhaleel@gmail.com

Khaled Abduesslam – M was born in 09-07-1983, Tekarkeba , Libya. He is currently working toward the MSc degree in Sebelas Maret University, Central Java,Indonesia. His research interest includes Power System Analysis, Power Electronics ,Power Quality,Control Systems, and Renewable Energy.

Prof. Muhammad Nizam. M. T. ph., D MIEEE., IPM.Member of University Senate /Head of control unit UNS Ex.Power System. Power Quality. Energy Management System. Email: Nizam_kh@ieee.org

Dr. Inayati, ST., MT., ph.D Chemical Engineering Department, Faculty of Engineering, Sebelas Maret University, Surakarta, Indonesia. Telp: +62271632112 (office) Email: inayati@fi.uns.ac.id