Healthcare Operations Improvement with an Integration of Discrete-Event Simulation and Lean Thinking

Techawit Hirisatja, Banhan Lila, and Ruephuwan Chantrasa

***Abstract*—**This research proposes a methodology for studying the behavior, identifying the problems, and recommending the improvement guideline of the healthcare operations. The methodology applied the mutual benefits of the prominent techniques: discrete-event simulation (DES) and lean thinking. Its application is demonstrated by a case study at the out-patient surgery department (OPSD) of the Health Science Center, Burapha University. To improve the OPSD operations, increasing the number of orthopedic physicians from 2 to 3 and re-managing the schedule of all the orthopedic physicians are recommended. As the results, the OPSD operations are improved by reducing the average patient turnaround time (ATT) and average patient waiting time (AWT) 11% - 23%.

***Keywords*—**Healthcare, Discrete-Event Simulation, Lean Thinking, Out-Patient Surgery

I. Introduction

OVER the last decade, service industry has been growing up throughout the world. In the United States, over 80% of the GDP are from service division, and more than 90% of the commercial labors work in service industry [1], [2]. Healthcare is one of the service sectors that play an important role in economic growth. The healthcare sector across the world is facing a number of challenges at present, seeking the ways to provide better health care systems at lower cost, and higher patient satisfaction. However, numerous healthcare organizations such as hospitals and clinics still face the problems with crowding, delays, cost containment, and patient safety. These problems tremendously affect the hospital performances because of patient dissatisfaction, higher costs, and adverse clinical consequences [3]. Thus, healthcare operations improvement is currently the novel issues and can be research opportunities among researchers.

Since 1970, tools and techniques for quality and efficiency improvement such as Statistical Process Control, Operations Research, Simulation, Lean Thinking are extensively applied to solve healthcare operations problems [4]-[6]. Computer Simulation has been applied extensively in many areas beyond the manufacturing system such as service, healthcare and public service. With the advantages of Computer Simulation, healthcare operations can be simulated, analyzed, and answering the "what-if" questions [6], [7]. Computer simulation commonly used in healthcare is Discrete-event Simulation (DES) with important characteristics as dynamic, randomness, variability, and uncertainty [4], [8]-[10]. Another technique that has been applied in healthcare since the end of 1990 is Lean Thinking [11]-[14]. Reference [15] pointed out the appropriation of applying lean thinking to healthcare. Lean thinking gives customers the first priority emphasizing on quality, safety, and creating confidence to organization staffs. The most important advantage of lean thinking over other techniques is that it provides practical tools and steps that are applicable and not complicated.

This research aimed to develop the methodology for improving the healthcare operations. The methodology applied the mutual benefits of DES and Lean thinking to study healthcare system behavior, and to identify root causes of the problems and recommend the real time improvement for the healthcare. This research used the out-patient surgery department (OPSD) of the Health Science Center, Faculty of Medicine, Burapha University to be the case study for operation improvement, and move forward to lean enterprise as a result. In this paper, literature reviews of DES and Lean Thinking for the healthcare are presented in section 2. Section 3 presents the proposed methodology to improve healthcare operations. Section 4 presents the results of an application to the case study. The last step presents conclusion and recommendation.

II. Literature Review

A. Discrete-Event Simulation

Discrete-event simulation (DES) is a technique concerning the modeling of a system as it evolves over time by a representation in which the state variables change instantaneously at separate points in time [10]. In general, DES includes 7 steps which are: 1) studying work system and

Techawit Hirisatja is with the Department of Industrial Engineering, Faculty of Engineering, Burapha University, Chonburi, 20131 Thailand (corresponding author's phone: +6687-618-8777 ; e-mail: b.techawit@gmail.com).

Banhan Lila is with the Department of Industrial Engineering, Faculty of Engineering, Burapha University, Chonburi, 20131 Thailand (e-mail: blila@buu.ac.th).

Ruephuwan Chantrasa is with the Department of Industrial Engineering, Faculty of Engineering, Burapha University, Chonburi, 20131 Thailand (e-mail: ruephuwc@buu.ac.th).

creating conceptual model, 2) creating basic simulation model, 3) verifying and validating the model, 4) testing the model, calculating replications and analyzing results, 5) identifying problems and proposing improvement guidelines, 6) adjusting the model, 7) proposing the optimal guidelines [10]. The DES has significant advantages over other techniques in that: DES is capable to define attributes of interest as desired; it takes account of randomness, variability, and uncertainty; it is highly flexible for model developing; and it is provided in available and cost effective software [4]. With these advantages, DES has been extensively applied in healthcare environments [16], [17]. However, DES by itself has limitation in identifying the problems and their causes. It also lacks of hand-on improvement tools. Moreover, application of DES in healthcare is still unacceptable among the healthcare practitioners [4], [18]. Therefore, in practice, it needs other practical improvement tools to be used in conjunction with DES [19].

B. Lean Thinking

Lean simply means creating more value for customers with fewer resources. The ultimate goal of Lean is to provide perfect value to the customer through a perfect value creation process that has zero waste. Lean thinking is a philosophy of management that focuses on process improvement and changes management, which can be used to identify and eliminate waste in any activity performed within a facility [20]. Lean thinking has been initially applied to healthcare in the USA since 2002. This approach was further adopted in EU and Australia to improve healthcare organization [21]-[23]. Reference [24] proposed 5 principles of lean thinking which are: 1) specify the value desired by the customer; 2) identify the value stream for each product/service; 3) make the product flow continuously; 4) introduce "pull" between all steps where continuous flow is impossible; 5) manage towards perfection. Although applying lean thinking to healthcare provides tremendous benefits, there are still the obstacles. In order to apply lean thinking, healthcare participants should clearly understand its concept; otherwise they can misuse lean tools, which finally affect the perfection flow of the healthcare operations [21], [22]. It would be an opportunity to this research to develop the methodology that provides mutual benefits of DES and lean thinking to analyze and find the optimal solutions to improve healthcare operation.

III. Research Methodology

This paper presents an integrated research methodology from 7 steps of DES [10], [19] and 5 steps of Lean thinking [13], [14] in order to propose the optimum improvement guidelines, which is adaptable and facile to be applied with the out-patient surgery department in healthcare service system.

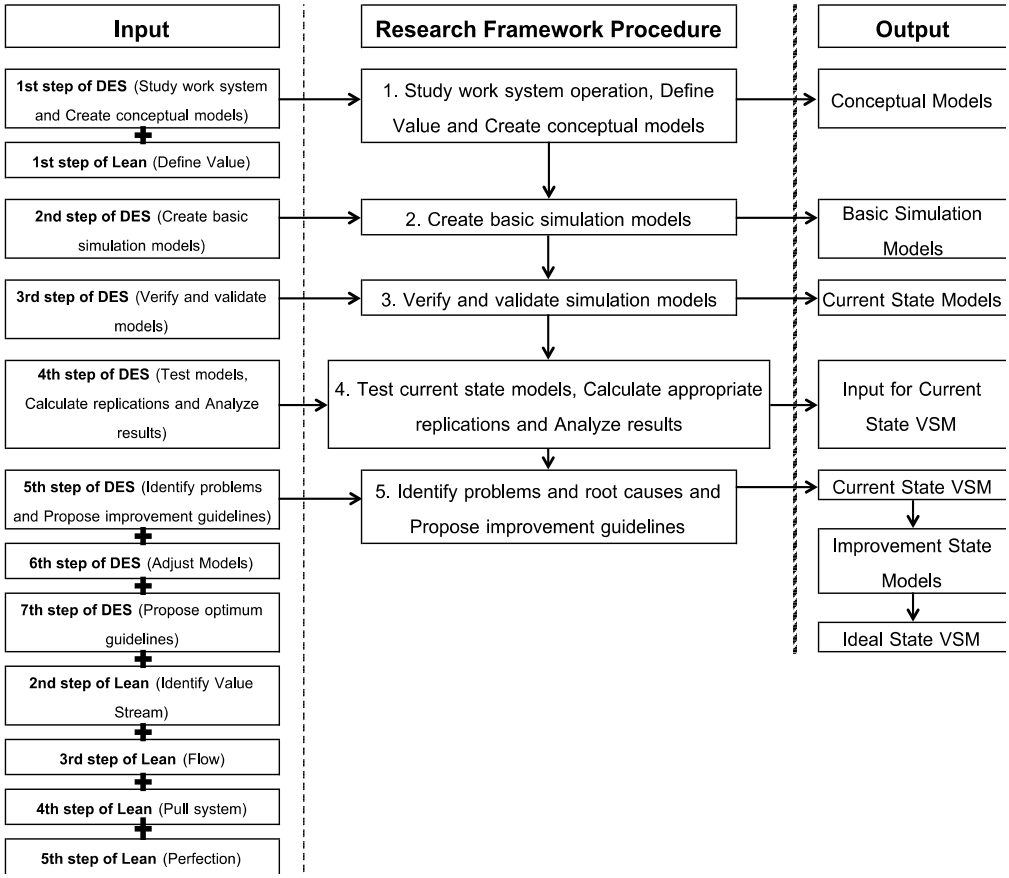

Fig. 1 Structure of Research Methodology

We create research methodology structure that contains 5 steps as shown in Fig. 1.

Firstly, when roughly comparing the steps of DES and Lean thinking, there are many noticeable differences. However, after the details of each step in DES and Lean thinking were thoroughly studied, we can find similarity of these two concepts. Therefore, we integrate the steps of these two concepts by considering their weaknesses and strengths. By doing so, the weakness of one concept will be complemented by the strength of the other concept. In this research, the methodology can be divided into 5 steps. The first step was developed based on the first steps of DES and Lean thinking. Steps 2-4 in this research were based on Steps 2-4 of DES. The fifth step in this research was the combination of Steps 5, 6 and 7 of DES and Steps 2-5 of Lean thinking. Each step has its own output for monitoring the research application and tracking progress in the implementation of healthcare service organization, and the output from each step will lead to action in the next step. Structure of the research methodology is shown in Fig.1.

Step 1 Study work system operation, Define Value and Create conceptual models

In step 1, the research methodology was developed by integrating the first step of DES with the first step of Lean thinking due to the similarity of working methods of these 2 steps. The first steps of DES and Lean thinking give different output information which can be further used in the step of model development. Output from DES is the details of work system and data collected for computer modeling. The output from Lean thinking is the value and key performance indexes (KPIs) defined for non-value-added activity identification and value stream mapping (VSM) creation.

To accomplish step 1, the following actions must be done: 1. Studying processes, workstations and operator working hours, 2. Defining value and KPIs, 3. Studying flow of value, 4. Studying layout of work system, 5. Collecting necessary data for computer modeling, and 6. Creating conceptual models. The output from this step will be shown in the form of Conceptual models.

Step 2 Create basic simulation models

In step 2 of this research methodology, we directly mimic the second step of DES because integrating Lean thinking with this step will not gain performance advantages for DES. The Basic simulation models of work system were developed by using ARENA Rockwell Software Version 13.0 (ARENA), since ARENA is capable of simulating many fields of work system such as transportation, manufacturing etc. Moreover, ARENA has a function for calculating statistical behavior of group sampling called Input Analyzer that has input variables in form of stochastic variables. The basic simulation model is developed based on work system logic shown in Conceptual models from step 1.

Step 3 Verify and validate simulation models

Similar to step 2, step 3 is also mimicked from the third step of DES. This step is a significant step for all simulation model development to ensure that the results from the developed models are correct and usable. Reference [19] showed 4 methods of verification which can be performed at any step and 2 steps of validation which were recommended to perform at every step. The model from this step is called Current state models.

Step 4 Test current state models, Calculate appropriate replications and Analyze results

In this step, we also mimic the forth step of DES because of the same reason as that in the 2 previous steps. This step will reduce variation of the result from the models to acceptable

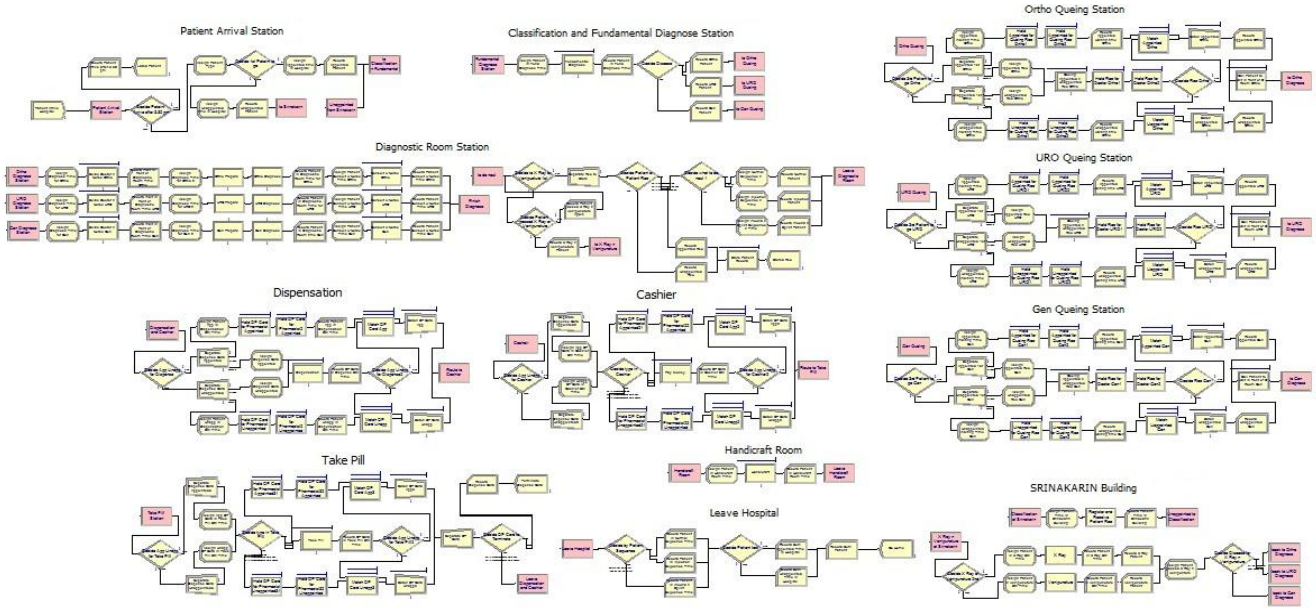

Fig. 2 Overview of Current state models of OPSD simulated by ARENA

level in statistic reliability. We use testing method from [19] to calculate proper replications for the models. The output from step 4 is used as the input for Current state VSM.

Step 5 Identify problems and root causes and Propose improvement guidelines

In step 5, we integrate the fifth, the sixth and the seventh step of DES with the second, the third, the forth and the fifth step of Lean Thinking. DES steps focus on result analyzing and model adjusting to propose the optimum guidelines while Lean thinking steps focus on work system improvement with Lean tools. The 5th step starts with creating VSM to identify VA and NVA, eliminating NVA by monitoring the work system; removing division boundary; using Kaizen and Kaikaku; applying pull system; and proposing ideal state VSM. Different from step 1, we integrate all these steps by considering the similarity of each step and practicability in healthcare service system application. For practicability, some researchers claimed that NVA elimination method by removing division boundary is harder to apply in healthcare than manufacturing application. Applying the whole pull system in healthcare service system is also difficult to succeed, thus, there is a need to maintain push system in some processes [6], [25].

In the integration part of this step, we use the fifth step of DES as a basis for development. Then, actions in Steps 2-4 of Lean thinking were included to enhance DES performing ability. Afterwards, the action in the sixth step of DES was directly performed before integrating the seventh step of DES and the fifth step of Lean Thinking. The objectives of the last steps of both DES and Lean thinking are the same, which is to propose the optimum improvement guidelines for healthcare service system. Therefore, after analyzing and interpreting results from state model improvement, the output from this step is Ideal state VSM and it is also the output of this research methodology.

IV. Application of Research Methodology and Result

This section shows sample outputs from each step afore. Although there are 7 outputs shown in Fig.1, this section explains only key outputs for implementing in healthcare service organization. We apply this research methodology with healthcare service organization as our case study to evaluate the methodology. Our case study is Out-patient surgery department (OPSD) of Health science center, Faculty of Medicine, Burapha University in Chonburi, Thailand. OPSD provides services for 2 types of outpatient, patient having appointment (APP) and patient without appointment (UNAPP), which includes new patients during 08.00 am to 4.00 pm. There are 3 types of diagnostics in OPSD; orthopedic surgery (ORT), urology surgery (URO), general surgery (GEN). OPSD is capable of accommodating about 1,000 – 1,500 patients per month with 14 staffs consisting of 4

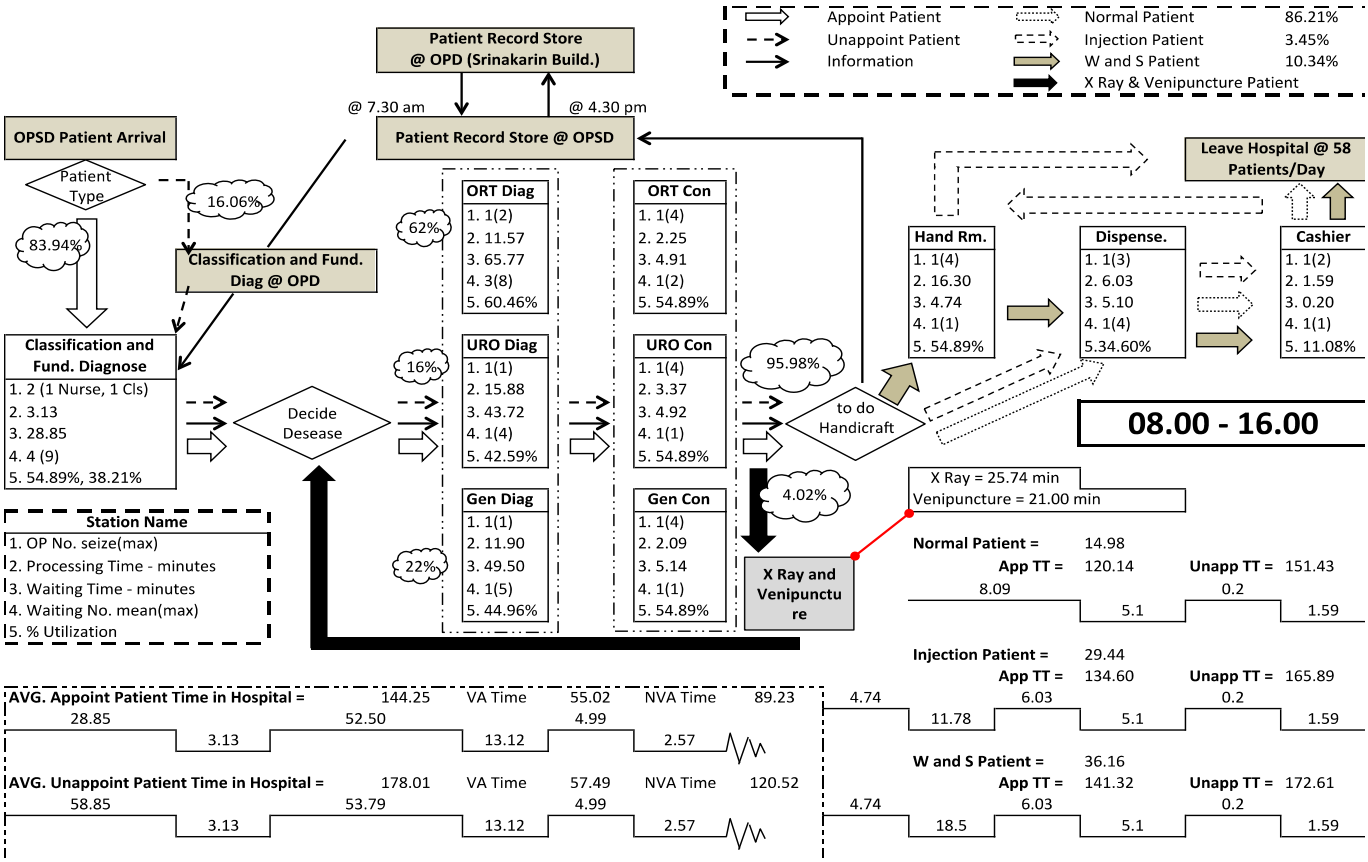

Fig. 3 Current State VSM of OPSD

physicians; 2 in ORT, 1 in URO and 1 in GEN; 4 nurses and 6 operators. OPSD has 6 workstations and 11 processes.

A. Current State Models

Current state models are the outputs from step 3 that were developed from conceptual models from step1 by using ARENA to simulate the system. In fact, output from step 2; Basic simulation models; and output from step 3; Current state models; are similar except that the Current state models in step 3 were the Basic simulation models after verification and validation by the method in section 3 as explained earlier.

First of all, the significant and must not mistake starting point of the research methodology is value definition. Value we defined in OPSD work system is patient satisfaction. Wherewith this value is intangible as characteristics of service system [26], KPIs have to be defined in term of value impacted. Therefore, we define the average patient turnaround time (ATT) and average patient waiting time (AWT) as KPIs. Then we use check sheet to collect data for Conceptual models and Current state models in the steps forwards.

As above, Conceptual models as the prototype of Current state models are developed by using 2 engineering tools which are Flow process chart and Spaghetti diagram. The first Conceptual models from Flow process chart explain flows of each patient types and relationship between processes and workstation in OPSD. The second from Spaghetti diagram explains patient flows between workstations in OPSD layout. Then we use system logic from both Conceptual models and input data from step 1 to create the Basic simulation models. After the verification and validation steps, Current state models are ready to be used as shown in Fig.2.

B. Current State VSM

Current state VSM as the output from step 5, as shown in Fig.3, would subsequently lead to Ideal state VSM. We create the Current state VSM using the results from Current state models from step 4. Current state VSM contains all patient flows and KPIs including important variables useful for identifying problems and root causes. We select the important variables by discussing with the experts in OPSD and researchers, and reviewing past researches.

As shown in Fig.3, Current state VSM is mainly used to identify problems in OPSD system in term of waiting time, waiting numbers and resource utilization. In this VSM, many problems are found. By using Pareto principles for screening these problems, they are categorized into 2 main problems; 1. average waiting time in front of diagnostic rooms, and 2. average waiting time in front of classification and fundamental diagnostic station. After considering the KPIs, the first problem is 58.83% and 44.83% of AWT in patient with appointment and patient without appointment, respectively, while the second problem is 32.33% and 48.83% of AWT in patient with appointment and patient without appointment, respectively. Summations of the percentages of these 2 problems are higher than 80% of AWT. Thus, we choose to improve the processes at the diagnostic rooms and at the classification and fundamental diagnostic station to solve the problems.

A combination between Cause and effect diagram (Fishbone Diagram) and Why-Why analysis is used to define root causes of the problems above by brainstorming with the experts in OPSD. The results show 9 root causes, which can be divided into 3 groups; 1) patient behavior, 2) inappropriate system and layout design, 3) inappropriate resource allocation. After brainstorming with the experts in OPSD, we choose to solve the causes in group 3 which consists of 3 causes; 1) Physician schedules are not in line with patient arrival, 2) No particular operator is in charge of moving patient, 3) Number of operators in rush hour is inadequate with patient treatment needs. It is highly possible to improve the OPSD system by getting rid of this group of causes than other groups in term of cost, time and human resources.

We propose an improvement by increasing the number of orthopedic physicians from 2 to 3 and re-managing the schedule of all orthopedic physicians. As shown in Fig.3, patients treated in ORT are about 64% of all patients per day while those who are treated in URO are about 16% and those in GEN are about 22%. New schedule of ORT physicians is shown in Table I. After that, we adjust the Current state models in term of proposed improvement and run the Improvement state models to compare the results in term of Ideal state VSM with Current state VSM.

TABLE I
CURRENT STATE AND IMPROVEMENT STATE SCHEDULE OF ORT PHYSICIAN

	Current State	Improvement State
Number of ORT Physicians	2	3
Working Hours	Both working at 09.00 - 12.00 / 13.00 - 16.00	1: 08.00 - 11.00 / 13.00 - 16.00 2: 08.00 - 12.00 3: 09.00 - 13.00
Sum of Working Hours	12 hr.	14 hr.

TABLE II
RESULTS FROM CURRENT STATE MODELS COMPARED TO IMPROVEMENT STATE MODELS

KPIs	Current State		Improvement State		Percent of Changes	
	APP	UNAPP	APP	UNAPP	APP	UNAPP
ATT (minute)	144.25	178.21	114.49	152.50	23.29%	14.43%
AWT (minute)	89.23	120.52	74.75	106.16	16.23%	11.91%
Waiting Time in front of ORT Diagnostic Rooms	63.89	67.64	24.80	28.67	61.18%	57.61%

An improvement proposed above does not affect the policy and system logic of OPSD, as well as processes, workstation and patient flows. These are reasons that Ideal state VSM is not different from Current state VSM in system logic and flows, except for KPIs: ATT and AWT. These KPIs are shown in Table II including waiting time in front of ORT diagnostic

rooms to ensure that the improvement is effective.

Table II shows a significant decrease in waiting time in front of ORT diagnostic rooms about 57%-61% shorter and this improvement also affects KPIs. AWT is decreased about 11%-16% and ATT is decreased about 14%-23%. Even though the decrease of wastes in OPSD as AWT is less than the decrease of ATT about 3%-7%, this still shows that the improvement is effective, and also shows that the research methodology proposed in this paper meets the objectives. With limitations of writing and unchanged OPSD system logic, we choose not to show the Ideal state VSM in this paper.

V. Conclusion and Future Research

In this paper, we present a research methodology for studying the behavior of work system, identifying the problems and their root causes in the process, and proposing the improvement guideline to continuously improve the healthcare service. The objectives of this research methodology, as in the introduction, are to study healthcare system behavior, to identify root causes of the problems and to recommend the real time improvement for the healthcare operation. All of these can be done by integrating 7 steps of DES with 5 steps of Lean Thinking. The research methodology consists of 5 steps and each step has its own output for monitoring the application of each step in the methodology and tracking progress in healthcare organization. We use OPSD as our case study for evaluating the research methodology and outputs are satisfactory in our point of view. The improvement guideline proposed in step 7 of the research methodology can reduce KPIs which are ATT and AWT about 11%-23%. This guideline might not show dramatic improvement but when considering specifically in individual improvement tasks and processes, the percentage of change is about 55%-60%. The main reason that the OPSD operation can be improved dramatically is because the root causes of the problem in OPSD system was analyzed and solved.

We found that many researchers use DES in term of decision making tool in past researches by creating alternatives for improvement guidelines. Thus, in the future research, we can apply DES in this manner, also with Lean thinking as in the proposed research methodology, with other engineering tools for proposing a comprehensive improvement in healthcare service organization.

Acknowledgment

We are grateful for the advice and support given by the staffs at the Out-patient surgery department (OPSD) of Health science center, Faculty of Medicine, Burapha University, Chonburi, Thailand.

References

[1] M. George, *Lean Six Sigma for Service: How to Use Lean Speed & Six Sigma Quality to Improve Service and Transactions*, New York: McGraw-Hill, 2003.

[2] L. C. Wu, and L. H. Wu, "Service Engineering: An Interdisciplinary Framework," *The Journal of Computer and Information Systems*, vol. 51, no. 2, pp. 14-23, 2010.

[3] L.V. Green, S. Savin, and M. Murray, "Providing Timely Access to Care: What is the Right Patient Panel Size?," *The Joint Commission Journal on Quality and Patient Safety*, vol. 33, no. 4, pp. 211-218, 2007.

[4] S. C. Brailsford, "Tutorial: Advances and Challenges in Healthcare Simulation Modeling," in *Proceedings of the 2007 Winter Simulation Conference*, pp. 1436-1448, 2007. http://dx.doi.org/10.1109/WSC.2007.4419754

[5] L. X. Li, and W. C. Benton, "Performance Measurement Criteria in Health Care Organizations: Review and Future Research Directions," *European Journal of Operational Research*, vol. 93, pp. 449-468, 1996. http://dx.doi.org/10.1016/0377-2217(95)00375-4

[6] A. Virtue, T. Chaussalet, and J. Kelly, "Healthcare Planning and Its Potential Role Increasing Operational Efficiency in the Health Sector," *Journal of Enterprise Information Management*, vol. 26, no. ½, pp. 8-20, 2013.

[7] M. Jahangirian, T. Eldabi, A. Naseer, L. K. Stergioulas, and T. Young, "Simulation in Manufacturing and Business: A Review," *European Journal of Operational Research*, vol. 203, pp. 1-13, 2010. http://dx.doi.org/10.1016/j.ejor.2009.06.004

[8] S. C. Brailsford, "Overcoming the Barriers to Implementation of Operations Research Simulation Models in Healthcare," *Clinical and Investigative Medicine*, vol. 28, no. 6, pp. 312-315, 2005.

[9] S. C. Brailsford, P. R. Harper, B. Patel, and M. Pitt, "An Analysis of the Academic Literature on Simulation and Modelling in Health Care," *Journal of Simulation*, vol. 3, no. 3, pp. 130-140, 2009. http://dx.doi.org/10.1057/jos.2009.10

[10] A. M. Law, and W. D. Kelton, *Simulation Modeling & Analysis*, 2nd ed., Singapore: McGraw-Hill, 1991.

[11] S. E. Heinbuch, "A Case of Successful Technology Transfer to Health Care: Total Quality Materials Management and Just-in-time," *Journal of Management in Medicine*, vol. 9, no. 2, pp. 48-56, 1995. http://dx.doi.org/10.1108/02689239510086524

[12] D. Whitson, "Applying Just-in-time Systems in Health Care," *IIE Solutions*, vol. 29, no. 8, pp. 32-37, 1997.

[13] N. J. Sayer, and B. Williams, *Lean for Dummies*, USA: Wiley, 2007.

[14] J. P. Womack, and D. T. Jones, *Lean Thinking: Banish Waste and Create Wealth in Your Corporation*, New York: Free Press, 2003.

[15] N. Burgess, and Z. Radnor, "Evaluating Lean in Healthcare," *International Journal of Health Care Quality Assurance*, vol. 26, no. 3, pp. 220-235, 2013. http://dx.doi.org/10.1108/09526861311311418

[16] S. Brenner, Z. Zeng, Y. Liu, J. Wang, and P. K. Howard, "Modeling and Analysis of the Emergency Department at University of Kentucky Chandler Hospital Using Simulations," *Journal of Emergency Nursing*, vol. 36, no. 4, pp. 303-310, 2010. http://dx.doi.org/10.1016/j.jen.2009.07.018

[17] M. Haji, and H. Darabi, "A Simulation Case Study: Reducing Outpatient Waiting Time of Otolaryngology Care Services Using VBA," in *2011 IEEE International Conference on Automation Science and Engineering*, pp. 525-530, 2011. http://dx.doi.org/10.1109/CASE.2011.6042448

[18] S. C. Brailsford, and J. Vissers, "OR in Healthcare: A European Perspective," *European Journal of Operational Research*, vol. 212, pp. 223- 234, 2011. http://dx.doi.org/10.1016/j.ejor.2010.10.026

[19] W. D. Kelton, R. P. Sadowski, and N. B. Swets, *Simulation with ARENA*, 5th ed., Singapore: McGraw-Hill, 2010.

[20] Z. J. Radnor, M. Holweg, and J. Waring, "Lean in Healthcare: The Unfilled Promise?," *Social Science & Medicine*, vol. 74, pp. 364-371, 2012. http://dx.doi.org/10.1016/j.socscimed.2011.02.011

[21] L. B. de Souza, "Trends and Approaches in Lean Healthcare," *Leadership in Health Service*, vol. 22, no. 2, pp. 1751-1879, 2009.

[22] R. J. Holden, "Lean Thinking in Emergency Departments: A Critical Review," *Annals of Emergency Medicine*, vol. 57, no. 3, pp. 265-278, 2011. http://dx.doi.org/10.1016/j.annemergmed.2010.08.001

[23] W. A. M. van Lent, E. M. Sanders, and W. H. van Harten, "Exploring Improvements in Patient Logistics in Dutch Hospitals with a Survey," *BMC Health Services Research*, vol. 12, pp. 1-9, August, 2012. http://dx.doi.org/10.1186/1472-6963-12-232

[24] J. P. Womack, D. T. Jones, and D. Roos, *The Machine that Change the World*, USA: Macmillan, 1990.
[25] A. L. Grove, J. O. Meredith, M. MacIntyre, J. Angelis, and K. Neailey, "UK Health Visiting: Challenges Faces During Lean Implementation," *Leadership in Health Services*, vol. 23, no. 3, pp. 204-218, 2010. http://dx.doi.org/10.1108/17511871011061037
[26] M. Harry, and R. Schroeder, *Six Sigma: The Breakthrough Management Strategy*, New York: Doubleday Random House, Inc., 2000.