Implementation of LED control system based on Zigbee network for energy-saving

Sang Woo Jung[1], Jun Yeong Lee[2], Seung Hyeop Yang[3], Seung Hyun Paik[4], and Hong Bae Park[5]

***Abstract*—**In this paper, we study human body detecting using PIR sensor and design LED control system based on star network topology of Zigbee. The human body detecting information using PIR sensor is transmitted to the status monitoring system, and the management system controls the LED lighting devices based on transmitted information. The information and control signals are transmitted using Zigbee network. The structure of the proposed LED control system is suitable for energy-saving because the LED lighting devices are controlled by area.

***Keywords*—**human body detecting, PIR sensor, LED control system, Zigbee network, energy-saving

I. Introduction

RECENTLY energy-saving issues have been increased worldwide interest, so the market of eco-friendly and low-power system is increased to reduce the energy consumption. Therefore many researches such as BEMS(building energy management system) have been done to reduce the power consumption. Unnecessary power consumption is a critical issue of the energy-saving, and the power consumption of lamps is a factor which can't be ignored [1]-[2]. Therefore many researches for automatic lighting device control have been done to improve the efficiency of lighting and the energy-saving.

On the other hand, the LED lighting has high energy efficiency and long life time, and which is gradually replacing the typical lighting device such as incandescent, fluorescent lamps, halogen lamps, and so on. And the demand of LED also has been increased sharply in various fields [3]-[5].

So it is very effective for energy-saving to develop a new lighting control system which is included the automatic lighting control and LED lighting. Especially the PIR(pyroelectric infrared ray) lighting device is widespread in the field of automatic lighting control. The PIR lighting device comes on when human body is only detected by the PIR sensor. But the conventional PIR lighting device has a problem that all lighting device does the same operation at the same time so unnecessary lighting devises are still turned on [6]-[8].

In this paper, a new LED control system which consists of human body detecting using PIR sensor, LED lighting, Zigbee network, and power control system is proposed. The LED control system separates the lighting area, and the separated lighting devises are interconnected by Zigbee network. The LED control board cooperates with the nearby others, and the operation is determined through their communication. So the LED lighting devices are controlled by area and are determined whether to be turned on or not.

The organization of this paper is as follows. In section 2, we describe a component of the LED control system, a flowchart related to communication protocol design, and a measurement of this system. In section 3, the implementation of LED control system and experiment are presented.

II. Structure of LED Control System

The LED control board consists of human body detecting module using PIR sensor, LED lighting device, Zigbee module, and power control board. The LED control boards are designated as a single primary and four secondarys in one area. In one area, the number of secondary is flexible according to the circumstance. The primary manages four secondarys based on their status information.

In the operating process, if any secondary detects user by PIR sensor module, the location of the secondary and status information of LED device are transmitted to the primary. And all primarys share the location information and transmit the message about light to the secondary nearby user. On the other hand, if the secondarys are far enough away from user, then they are received the power off message. So the LED lighting devices are controlled by area and are determined whether to be turned on or not. Block diagram of the proposed LED control system and network configuration are shown in Fig. 1 and 2.

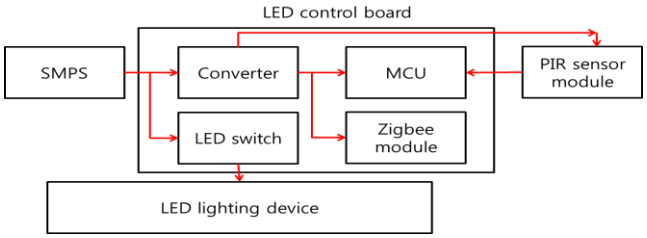

Fig. 1 Block diagram of LED control board

Sang Woo Jung[1] is with the Kyungpook National University, Daegu, ASI|KR|KS002|TAEGU, Republic of Korea (demongun@naver.com)

Jun Yeong Lee[2] is with the Kyungpook National University, Daegu, ASI|KR|KS002|TAEGU, Republic of Korea (damadama@hanmail.net)

Seung Hyeop Yang[3] is with the Kyungpook National University, Daegu, ASI|KR|KS002|TAEGU, Republic of Korea (middle10@naver.com)

Seung Hyun Paik[4] is with the Kyungpook National University, Daegu, ASI|KR|KS002|TAEGU, Republic of Korea (e-mail: ksgino1@gmail.com).

Hong Bae Park[5] is with the Kyungpook National University, Daegu, ASI|KR|KS002|TAEGU, Republic of Korea (corresponding author's phone: 82-53-950-5548; fax: 82-53-940-8848; e-mail: hbpark@knu.ac.kr)

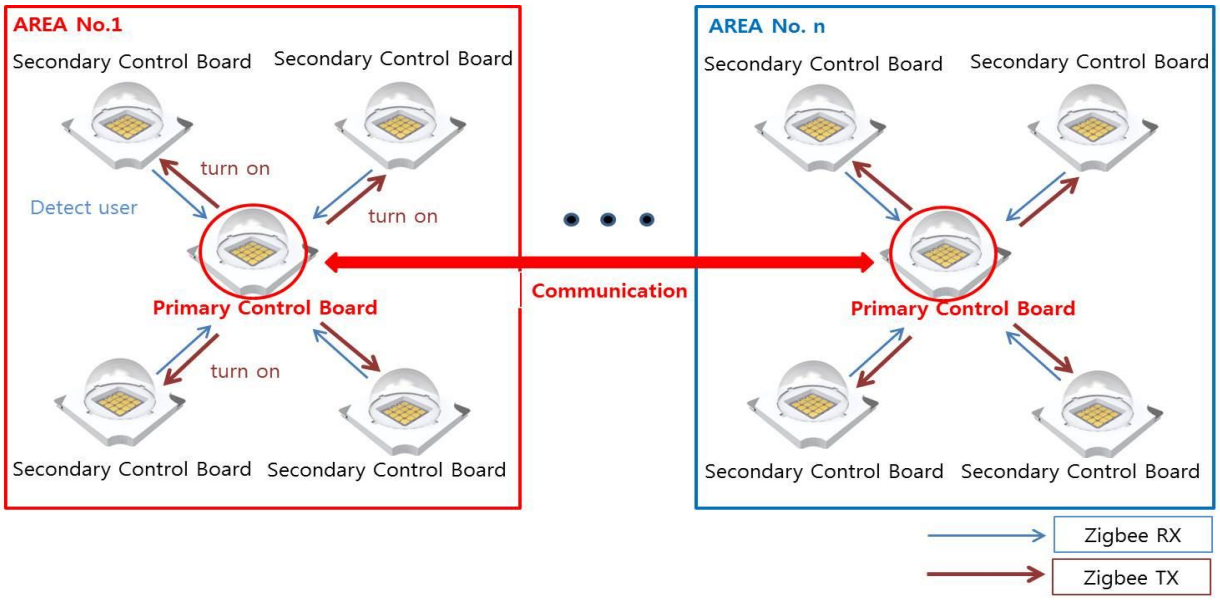

Fig . 2 Network configuration of control system

A. PIR sensor module

The PIR sensor detects the infrared radiation on the basis of the characteristics that the polarization of pyroelecric material changes with temperature. The housing will usually have a window which is used as a filter to limit the wavelengths to 8-14 micrometers which is closest to the infrared radiation emitted by the human body [9]

Various kinds of PIR sensor have different characteristics which is shown in Table 1. We choose D203S which is suitable for our amplifier and filter circuit design and use Fresnel-Lens to increase the detection range and angle.

TABLE Ⅰ.
THE SPECIFICATION OF PIR SENSORS

Model	Operating voltage	Noise	Field of View, Vertical
D203S	3-15V	>70mV[Vp-p]	125 degree
D203B	3-15V	<70mV[Vp-p]	120 degree
LHI778	2-12V	50[μVpp]	71 degree
LHI878	2-12V	50[μVpp]	87 degree
LHI968	2-15V	50[μVpp]	100 degree

Fig. 3 PIR sensor module

B. LED control board

LED control board consists of MCU block, DC-DC converter block, and Zigbee module. The MCU block is 8bit Microcontroller Atmega16L of Atmel. The DC-DC converter block is supplied from the SMPS(switched mode power supply) which is plugged into the AC power source and transforms the voltage to 3.3V operating voltage for the MCU block, PIR sensor module, and Zigbee module. When PIR sensor module detects user, the output is a voltage signal, then through amplifier and filter circuit, it is converted to higher and clear voltage signal. And then the signal is converted an analog input signal to 10-bit binary by ADC module.

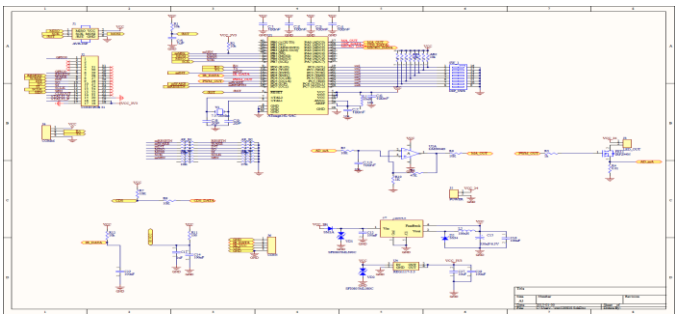

Fig. 4 The circuit diagram of LED control board

C. Zigbee network

Zigbee is a low-cost, low-power, and wireless mesh network standard which is targeted at wide development of long life device in wireless control and monitoring applications. Zigbee devices have low latency, which further reduces average current. Zigbee operates in the ISM(industrial, scientific and medical) radio band and Zigbee protocol is intended for embedded applications requiring low power consumption and tolerating

low data rate. Our system is composed of star network topology, in which every node is connected to a central nod called a hub or switch [10].

There are the primary of a type of FFD(full function device) and the secondary of RFD(reduced function device) in our network system. The primary which is the centerpiece of state monitoring system operates like server, and controls the secondary. The flowchart of the control system using Zigbee network is presented in Fig. 5.

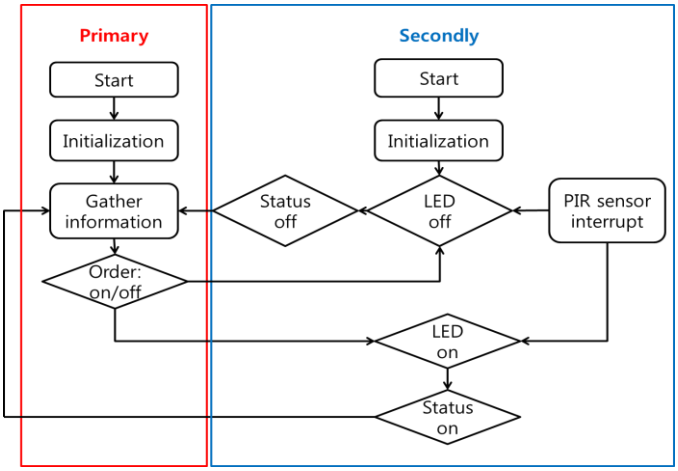

Fig. 5 The flowchart of Zigbee network

III. Implementation of LED Control System and Experiment

Firstly, we design and implement the LED control board whose power consumption is one-fifth of the conventional control board shown in the Table 2.

TABLE II
THE POWER CONSUMPTION COMPARISON

	Module	Standby power consumption	User approaches
Proposed LED control system	MCU	12.21mW	60.885mW
	PIR sensor module	99 μW	99 μW
	Zigbee module	93mW	155.76mW
	Total power	105.309mW	216.744mW
Conventional LED control system	Power consumption	500mW	1W

The implementation of LED control system is shown in Fig. 6 and Fig. 7.

Fig. 6 The implementation of control board

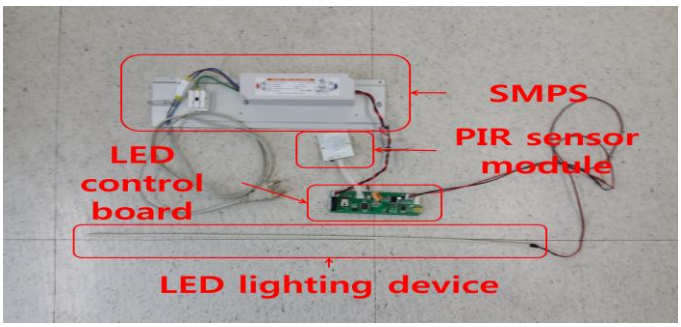

Fig. 7 The implementation of LED control system

We set up the system hardware on the wall and proceed with practical experiment in the corridor. The scenes of the experiment are shown in Fig. 8 and show that the light follows user. In this result, unnecessary LED light devices are out and the LED light nearby user is turned on.

Fig. 8 Experiment

IV. Conclusion

In this work, we developed a new LED control system which consists of human body detecting using PIR sensor, LED lighting, Zigbee network, and power control system. The proposed system divides the lighting area according as star network topology. So the LED lighting devices are operated by the area and the unnecessary power consumption was reduced. Also the hardware of system needs lower power consumption than conventional system. Through the test of power consumption and the practical experiment, we verified the energy-saving possibility of the proposed system.

Acknowledgment

This work (C0212848) was supported by Business for Cooperative R&D between Industry, Academy, and Research Institute funded Korea Small and Medium Business Administration in 2014.

References

[1] A. Somov, A. Baranov, D. Spirjakin, and R. Passerone, "Circuit Design and Power Consumption Analysis of Wireless Gas Sensor Nodes: One-Sensor Versus Two-Sensor," *IEEE SENSORS J.*, vol. 14, no. 6, pp. 2056-2063, 2014.
http://dx.doi.org/10.1109/JSEN.2014.2309001

[2] X. Luo, T. Fiu, J. Liu, X. Guo, and G. Wang, "Design and implementation of distributed fall detection system based on wireless sensor networks," *EURASIP J. on Wireless Communications and Networking*, pp. 1-13, 2012.
http://dx.doi.org/10.1186/1687-1499-2012-118

[3] C. H. Tsai, Y. W. Bai, M. B. Lin, R. Jhang, and Y. W. Lin, "Design and Implementation of a PIR Luminaire with Zero Standby Power Using a Photovoltaic Array in Enough Daylight," *IEEE Trans. Consumer Electron*ics vol. 59, no. 2, pp. 2013.

[4] C. H. Tsai, Y. W. Bai, C. A. Chu, C. Y. Chung, and M. B. Lin, "Design and Implementation of a Socket with Zero Standby Power using a Photovoltaic Array," *IEEE Trans. Consumer Electron*ics, vol. 56, no. 4, pp. 2686-2693, 2010.
http://dx.doi.org/10.1109/TCE.2010.5681157

[5] F. Erden and A. E. Cetin, "Hand Gesture based Remote Control System Using Infrared Sensors and a Camera," *IEEE Trans. Consumer Electron*ics, vol. 60, no.4, pp. 675-680, 2014.
http://dx.doi.org/10.1109/TCE.2014.7027342

[6] T. H. Yu, K. M. Im, and J. H. Lim, "Implementation of LED Dimming Control System Based on RTP,*" ICCT 2013*, pp. 3-6, 2013.

[7] Y. H. Jang, S. J. Lim, and H. Y. Kim, "LED Lighting System applying Dimming Control Method," *ICCT 2012*, pp. 26-28, 2012.

[8] C. H. Tsai, Y.W. Bai, C. A. Chu, C. Y. Chung, and M. B. Lin, "PIR-sensor-based Lighting Device with Ultra-low Standby Power Consumption," *IEEE Trans. Consumer Electron*ics, vol. 57, no 3, pp. 1157-1164, 2011.
http://dx.doi.org/10.1109/TCE.2011.6018869

[9] H. H. Kim, K. N. Ha, S. Lee, and K. C. Lee, "Resident Location-Recognition Algorithm Using a Bayesian Classifier in the PIR Sensor-Based Indoor Location-Aware System," *IEEE Trans. System, Man, And Cybernetics*, vol. 39, no. 2, pp.240-245, 2009.
http://dx.doi.org/10.1109/TSMCC.2008.2008099

[10] P. Ran, M. H. Sun, and Y. H. Zou, "Zigbee Routing Selection Strategy Based on Data Services and Energy-Balanced ZigBee Routing," *APSCC 2006*, pp.400-404, 2006.
http://dx.doi.org/10.1109/apscc.2006.116