Research on Omni-Directional Walking Platform for Virtual Reality

Dong Gi Kwag, Min Sun Kim, Sung-Uk Bae, Sung Min Cho, and Jae-Hoon Joo

Abstract**----**The physical movement of the user is not possible for virtual reality technology such as a military training simulator, first person shooter, virtual machines, and so on. This obstructs their engagement with virtual reality and thus decreases the training effectiveness or the level of satisfaction. This study has designed an 'omni-directional walking platform' so that when realizing a movement for virtual reality, it moves in the actually preferred direction with the result that the same movement is achieved for virtual reality. We have enhanced fabrication for the platform by uniting it with the roller assembly and chain. Also we have constructed a control algorithm so that an object above the platform can be moved along a 2 degree of freedom on a plane by linking it with virtual reality contents.

Keywords**—**Omni-Directional Walking Platform, Virtual Reality, Tracking Motion

I. Introduction

RECENTLY much attention has been shown to simulator technology which recognizes the physical movement of the user and reflects it on operation for virtual reality so that the operator feels as if he or she is actually moving in virtual reality. It is expected that the future growth rate of the related simulator market will over 9.9% for soldier training as compared to 3.9% for aviation. Overseas, the US military or research institute is researching and developing omni-directional motion platform. The civilian sector utilizes it for games[1]-[2].

With the omni-directional walking platform motion system, the user can actually walk or run without any limitations of space in the virtual reality space similar to the real world without employing external equipment. A person can run or walk and interact with virtual reality as a result of the convergence of virtual reality technology and mechatronics technology[3]-[5]. The Cyberwalk Project of US and the University of Orebro of Sweden are developing the walking system for the military(see Table I). The driving method as proposed by this study differs from existing methods and realizes a 2 degree of freedom of motion and has outstanding features for installation and maintenance.

Dong Gi Kwag is with Korea National Industrial Convergence Center. 426-910, 143 Hanggaulro, Sangrok-gu, Ansan-si, Gyeonggi-do, Republic of Korea(e-mail:dgkwag@kitech.re.kr)

Jae-Hoon Joo is CEO of IMNS Co., Ltd. 305-343, 8-210 TBI Center, KIMM, 156 Gajeongbuk-Ro, Yuseong-Gu, Daejeon, Republic of Korea (e-mail : jhjoo@imns.co.kr)

Min Sun Kim, Sung-Uk Bae, and Sung Min Cho is with Korea National Industrial Convergence Center. 426-910, 143 Hanggaulro, Sangrok-gu, Ansan-si, Gyeonggi-do, Republic of Korea(e-mail:kimms620@kitech.re.kr)

TABLE I
COMPARISON OF OMNI-DIRECTIONAL WALKING SYSTEM

	Cyber-Carpet	Omni-directional treadmill	Omni-Directional Walking Platform
Type			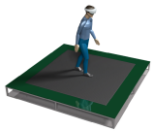

II. Omni-Directional Walking Platform System Structure

This study has overcome the limitations of the form which realizes motion in virtual reality. Also to realize the movement of the utilizer along a 2 degree of freedom, the study has realized integration with a diagonal roller assembly and chain as well as linkage with contents utilizing a servo by controlling the platform site. The basic concept for realizing the 2 degree of freedom of the omni-directional walking platform is shown by Fig.1

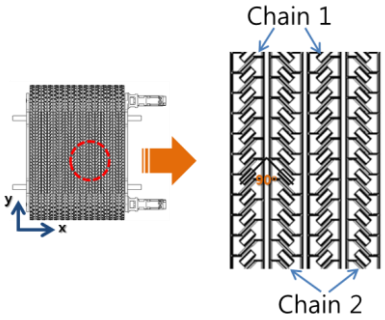

(a) Chain Component of Platform

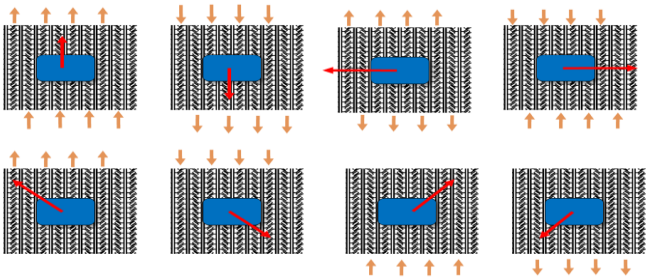

(b) Moving according to the direction of chain travel

Fig. 1 Omni-Directional Walking Platform Concept

Chain 1 and Chain 2 are each connected to a different motor axis so that it can travel freely in the direction of the moving

mass as the direction and speed are controlled. Fig.1 shows that a 2 degree of freedom motion is possible for the blue object with individual control according to the direction of movement of the diagonal roller/45˚ linked to the spraket of the latter end. To create a 2 degree of freedom motion, the diagonal rollers cross each other at an angle per degree of freedom where the roller assembly is not parallel to each other. The rollers are allocated at an angle where they are not parallel to the paralleled driving axis of 2 degree of freedom. A person's direction and scale of the motion can be tracked by the sum of the vector($\vec{F} = \vec{F}_1 + \vec{F}_2$), which responds to the amount of motion applied to each chain and roller according to the direction and scale of the driving speed per degree of freedom.

The structure of the omnidirectional walking platform is composed of two servomotors, a chain, and a roller assembly. Fig. 2 shows the spraket and 45˚ type roller assembly. The platform is linked to the two spraket motors as shown by Fig. 2, and each can be driven along a different direction. Also it minimizes the rate of creating a Slip by maximizing the friction force of the moving mass with the roller.

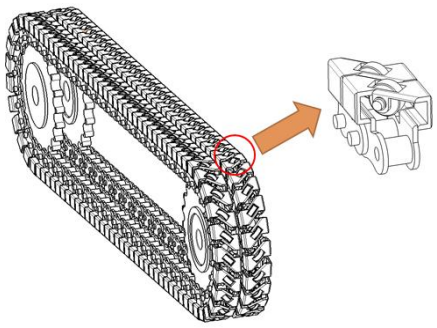

(a) Chain Component of Platform

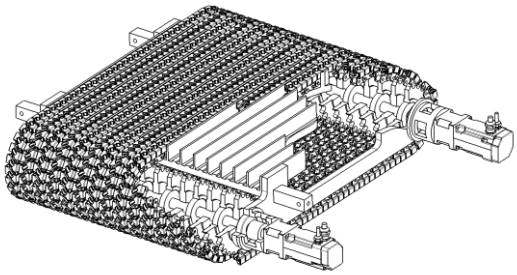

(b) Module of Omni-Directional Walking Platform

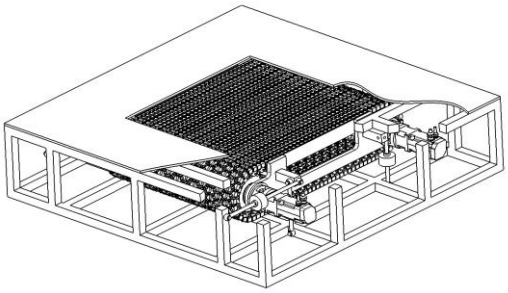

(c) Assembly of Omni-Directional Walking Platform

Fig. 2 Chain-Roller Structure of Motion Platform

III. Omni-Directional Walking Platform System Experiment Setup

To verify the performance of the omni-directional walking platform system, we have configured the system as Fig.3 Structurally the system has been manufactured to withstand a person's dynamic load, and the load on the motor has been adjusted by minimizing the friction force of the chain and spraket. We have employed a guide to minimize the interference among the individual chains.

To realize the 2 degree of freedom motion as proposed by this study, we have succeeded to rotate the moving mass while adjusting the frontward/reverse direction of two motors. Yet there was an error with the motion of the moving mass because of a slip of between the roller moving mass according to the latter's weight. There is a need for extra processing of the roller surface of brass material so that adequate friction can be maintained. It is possible to achieve a control method for the platform so as to realize a preferred from of simulation by collating the data according to the contents to be utilized and the motion of the utilizer.

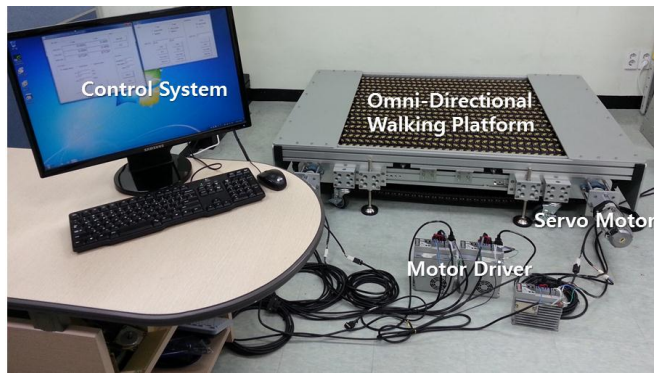

Fig. 3 Omni-Directional Walking Platform Experiment Setup

To measure the dynamic load of each axis of the omni-directional walking platform, we have installed a loadcell. We measured the intensity applied on each loadcell and acquired feedback for the position, motion direction, and intensity of the utilizer. With this, we provided control so that a person never moves beyond the platform.

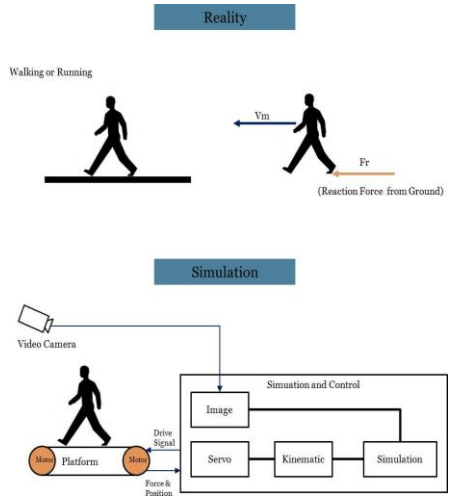

Fig. 4 Tracking Motion for User Motion Simulation

Fig. 4 is a mimetic diagram showing the method of control. It shows concisely how the system control for virtual reality acquires the direction and scale of motion of the utilizer by measuring the intensity applied on the loadcell installed on the latter end for control as well as utilizes the position of the utilizer and the direction and scale of motion speed, and so on based on the load data and the image recognition of a camera. When a person travels at the speed of V_m, the loadcell at the latter end of the omni-directional walking platform measures the reaction force directed against the roller, detects the person's motion, and controls the motor.

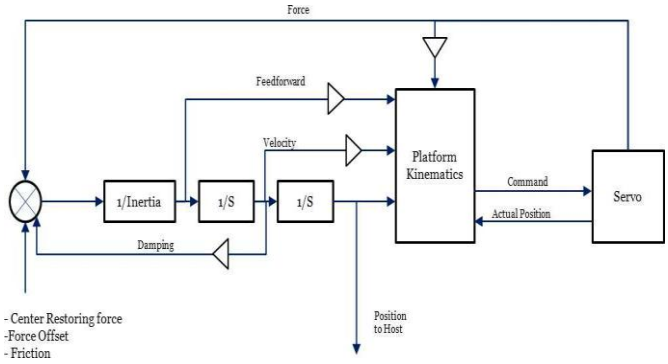

Fig.5 Control Block Diagram of Omni-Directional Walking Platform

Fig.5 shows the transfer function and parameter acquired from a mathematical modeling to track the performance of the platform. Presently, we are studying the optimized transfer function coefficient consistent with disturbance.

IV. Conclusion

This study is about an omni-directional motion platform and a virtual reality walking system which employs it. The study is utilized to realize such virtual reality as battlefield simulation for military training, virtual reality machine, battle, action, or sports game, and so on Existing equipment or methods cannot realize motion for virtual reality from the physical movement of the user and realize physical motion with a separate feedback device or treadmill motion. The problem with this is that it obstructs a person's engagement with virtual reality and decreases realism. We have developed an omni-directional motion platform and a virtual reality walking system employing it, which considers even the safety of the operator. With the platform and system, a person can move front and back, left and right and achieve the same motion during virtual reality and concurrently remain confined always to a specified sphere even when moving front and back, left and right. We provided a structural design where a 2 degree of freedom on the platform plane is realized based on a diagonal roller structure. Also we designed a control algorithm so as to realize a virtual reality utilizing a load sensor. This system can be utilized for broadcasting contents, education and practical learning, and defense industry simulator industry. Based on further supplementary research, we seek to increase the feasibility of its utilization by simplifying the structure.

Acknowledgment

This paper supported by the Development of Industrial Convergence Information Platform 2/5 (Grant No:10041570) funded by the Ministry of Trade, Industry & Energy (MOTIE,Korea)

References

[1] CyberWalk, "EU STREP Project FP6-511092, , http://www.cyberwalk-project.org",2005.

[2] A.D.Luca.R, P.R.Giordano, "Control Design and Experimental Evaluation of the 2D Cyber Walk Platform," IEEE/RSJ International Con.,Oct.2009, pp.5051-5058

[3] R. C. Hayward and J. M. Hollerbach, "Implementing virtual stairs on treadmills using torso force feedback", in Proc. 2002 IEEE Int. Conf. on Robotics and Automation, Washington, DC, 2002, pp. 586-591.

[4] R. Darken, W. Cockayne, and D. Carmein, "The Omnidirectional Treadmill: A locomotion device for virtual worlds", in Proc. Symp. User Interface Software and Technology, 1997, pp. 213-221.

[5] N.Hirzallah, "A Simple Exercise-to-Play Proposal that would Reduce Games Addiction and Keep Players Healthy", IJACSA., vol.4,No.2, 2013.